इंटरनेट मानक

Disclosure to Promote the Right To Information

Whereas the Parliament of India has set out to provide a practical regime of right to information for citizens to secure access to information under the control of public authorities, in order to promote transparency and accountability in the working of every public authority, and whereas the attached publication of the Bureau of Indian Standards is of particular interest to the public, particularly disadvantaged communities and those engaged in the pursuit of education and knowledge, the attached public safety standard is made available to promote the timely dissemination of this information in an accurate manner to the public.

"जानने का अधिकार, जीने का अधिकार"
Mazdoor Kisan Shakti Sangathan
"The Right to Information, The Right to Live"

"पुराने को छोड नये के तरफ"
Jawaharlal Nehru
"Step Out From the Old to the New"

IS 13379 (1992): Forestry Tools - Wooden Setting Cat, Bow Saw Blades [PGD 7: Industrial Engineering]

"ज्ञान से एक नये भारत का निर्माण"
Satyanarayan Gangaram Pitroda
"Invent a New India Using Knowledge"

Act Number 22 of 2005
The Indian Parliament
RIGHT TO INFORMATION

Made Available By
Public.Resource.Org

"ज्ञान एक ऐसा खजाना है जो कभी चुराया नहीं जा सकता है"
Bhartṛhari—Nītiśatakam
"Knowledge is such a treasure which cannot be stolen"

BLANK PAGE

BRUTUM FULMEN

IGNORANTIA JURIS NON EXCUSAT

PROTECTED BY COPYRIGHT

भारतीय मानक

(Reaffirmed 2002)

वानिकी औजार – कमानदार आरे के ब्लेडों के लिए लकड़ी के सेटिंग केट – विशिष्टि

Indian Standard

FORESTRY TOOLS — WOODEN SETTING CAT, BOW SAW BLADES — SPECIFICATION

UDC 630·3 : 621·93·02

© BIS 1992

BUREAU OF INDIAN STANDARDS
MANAK BHAVAN, 9 BAHADUR SHAH ZAFAR MARG
NEW DELHI 110002

August 1992

Price Group 1

Forestry and Plantation Crops Machinery Sectional Committee, FAD 40

FOREWORD

This Indian Standard was adopted by the Bureau of Indian Standards, after the draft finalized by the Forestry and Plantation Crops Machinery Sectional Committee had been approved by the Food and Agriculture Division Council.

Wooden setting cats are used to measure the bow saw blade teeth setting which is done alternatively to the right and to the left in order to prevent the saw from binding or running heavily. By setting the saw kerf is made little wider than the thickness of the blade to reduce the friction. Settings shall be wider for soft wood than for hard wood. Wooden setting cat is used for checking the correctness of setting on the blade. Considering the use of setting cats for the maintenance of bow saw blades, a need was felt to prepare this standard for helping in the quality production of this tool.

In the preparation of this standard assistance has been derived from the Forest Operations Division, Forest Research Institute (ICFRE), Dehradun.

For the purpose of deciding whether a particular requirement of this standard is complied with, the final value, observed or calculated expressing the result of a test or analysis, shall be rounded off in accordance with IS 2 : 1960 'Rules for rounding off numerical values (*revised*)'. The number of significant places retained in the rounded off value should be the same as that of thes pecified value in this standard.

Indian Standard

FORESTRY TOOLS — WOODEN SETTING CAT, BOW SAW BLADES — SPECIFICATION

1 SCOPE

This standard specifies the materials, dimensions and other requirements for wooden setting cats for Bow saw blades as per IS 11251 : 1987.

2 REFERENCES

The list of Indian Standards which are necessary adjuncts to this standard is given in Annex A.

3 MATERIALS

Various components of wooden setting cats shall be made from the materials given below :

Component	*Material*
Body	Seasoned carpentry wood
Nails	Mild steel (*see* IS 226 : 1975)

4 SHAPE AND DIMENSIONS

The dimensions shall be as given in Fig. 1.

4.1 The tolerances for various dimensions shall be of coarse class specified in IS 2102 (Part 1) : 1980.

5 MANUFACTURE

The nails shall be tight fit. The tip of the nails shall be flat.

6 WORKMANSHIP AND FINISH

6.1 The setting cat shall be free from defects, such as flaws, cracks, rust, burrs, and other manufacturing defects.

7 DESIGNATION

The setting cat shall be designated by its name and the number of this Indian Standard as:

Wooden Setting Cat for Bow Saw Blades, IS 13379.

8 MARKING

Each setting cat shall be marked as follows :

a) Manufacturer's name and recognised trade-mark;

b) Model number; and

e) Batch, code or serial number.

8.1 Standard Marking

Setting cat may also be marked with the Standard Mark.

9 PACKING

Each setting cats shall be suitably packed to avoid damage in handling and transit.

10 SAMPLING

In order to ascertain the conformity of the lot, the procedure for sampling inspection as given in IS 2500 (Part 1) : 1983 shall be followed. The inspection level and AQL for various characteristics shall be according to **10.1** and **10.2**

10.1 For dimensions, workmanship and finish, a single sampling plan with inspection level IV and AQL of 4 percent given in Tables 1 and 2 of IS 2500 (Part 1) : 1983 shall be followed.

10.2 For hardness and other requirements a single sampling plan with inspection level Ii and AQL of 4 percent as given in Tables 1 and 2 of IS 2500 (Part 1) : 1983 shall be followed.

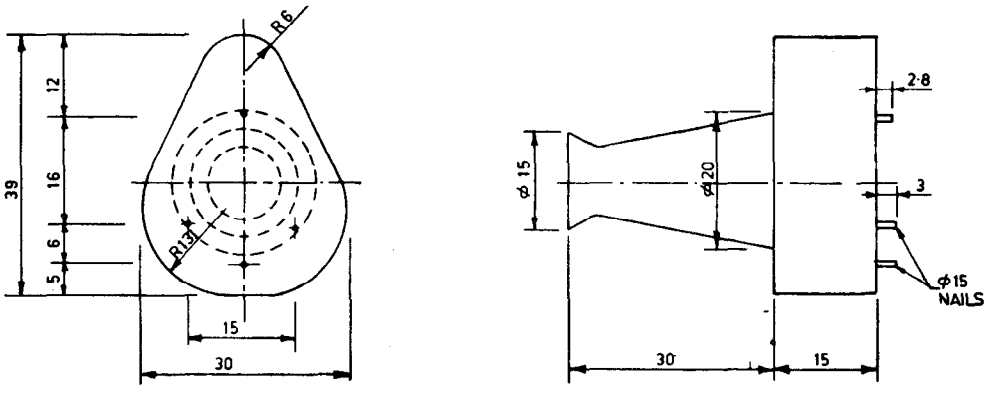

All dimensions in millimetres.

FIG. 1 WOODEN SETTING CAT, BOW SAW BLADE

ANNEX A

(*Clause* 2)

LIST OF REFERRED INDIAN STANDARDS

IS No.	*Title*
226 : 1975	Specification for structural steel (standard quality) (*fifth revision*)
2102 (Part 1) :1980	General tolerances for dimensions and form and position: Part 1 General tolerances for linear and angular dimensions (*second revision*)
2500 (Part 1) : 1983	Sampling inspection Tables: Part 1 Inspection by attributes and by count of defects (*first revision*)
11251 : 1987	Specification for bow saw blades

Standard Mark

The use of the Standard Mark is governed by the provisions of the *Bureau of Indian Standards Act, 1986* and the Rules and Regulations made thereunder. The Standard Mark on products covered by an Indian Standard conveys the assurance that they have been produced to comply with the requirements of that standard under a well defined system of inspection, testing and quality control which is devised and supervised by BIS and operated by the producer. Standard marked products are also continuously checked by BIS for conformity to that standard as a further safeguard. Details of conditions under which a licence for the use of the Standard Mark may be granted to manufacturers or producers may be obtained from the Bureau of Indian Standards.

Bureau of Indian Standards

BIS is a statutory institution established under the *Bureau of Indian Standards Act, 1986* to promote harmonious development of the activities of standardization, marking and quality certification of goods and attending to connected matters in the country.

Copyright

BIS has the copyright of all its publications. No part of these publications may be reproduced in any form without the prior permission in writing of BIS. This does not preclude the free use, in the course of implementing the standard, of necessary details, such as symbols and sizes, type or grade designations. Enquiries relating to copyright be addressed to the Director (Publications), BIS.

Revision of Indian Standards

Indian Standards are reviewed periodically and revised, when necessary and amendments, if any, are issued from time to time. Users of Indian Standards should ascertain that they are in possession of the latest amendments or edition. Comments on this Indian Standard may be sent to BIS giving the following reference:

Doc : No. FAD 40 (0081)

Amendments Issued Since Publication

Amend No.	Date of Issue	Text Affected

BUREAU OF INDIAN STANDARDS

Headquarters:

Manak Bhavan, 9 Bahadur Shah Zafar Marg, New Delhi 110002
Telephones : 331 01 31, 331 13 75

Telegrams : Manaksanstha
(Common to all Offices)

Regional Offices :		Telephone
Central :	Manak Bhavan, 9 Bahadur Shah Zafar Marg NEW DELHI 110002	331 01 31 331 13 75
Eastern :	1/14 C.I.T. Scheme VII M, V.I.P. Road, Maniktola CALCUTTA 700054	37 84 99, 37 85 61, 37 86 26, 37 86 62
Northern :	SCO 445-446, Sector 36-C, CHANDIGARH 16003	53 38 43, 53 16 40, 53 23 84
Southern :	C.I.T. Campus, IV Cross Road, MADRAS 600113	235 02 16, 235 04 42, 235 15 19, 235 23 15
Western :	Manakalaya, E9 MIDC, Marol, Andheri (East) BOMBAY 400093	632 92 95, 63 78 58, 632 78 91, 632 78 92

Branches : AHMADABAD, BANGALORE, BHOPAL, BHUBANESHWAR, COIMBATORE FARIDABAD GHAZIABAD, GUWAHATI, HYDERABAD, JAIPUR, KANPUR, LUCKNOW, PATNA, THIRUVANANTHAPURAM.

Printed at Progressive Printers, Shahdara, Delhi, India